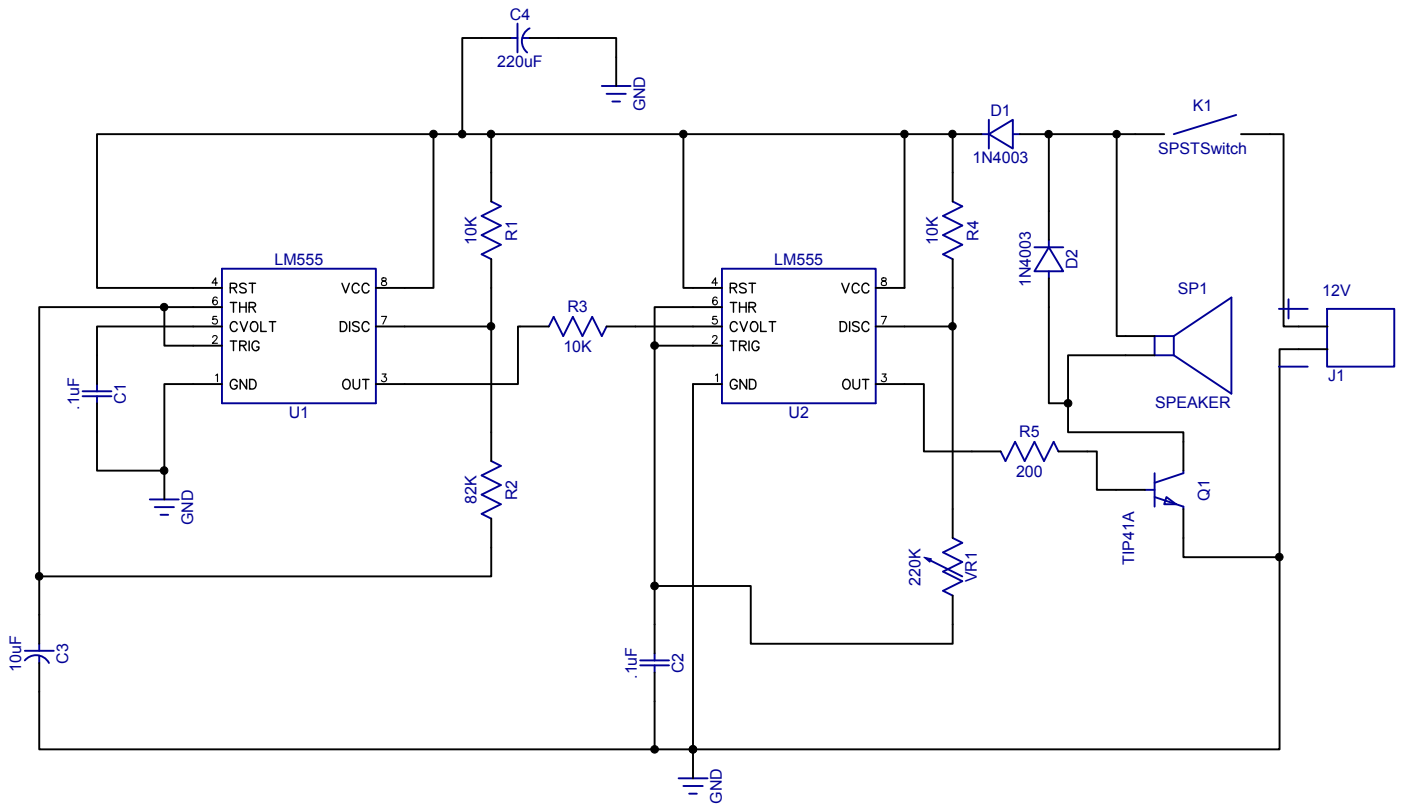

Designed by Jake McCune	Checked by Dr. Pan	Approved by - date - 00/00/00	File name	Date 00/00/00	Scale NTS
California Polytechnic State University San Luis Obispo		JAKE MCCUNE SIREN PROJECT			
		IME 458-01		REV A	Sheet 1/1