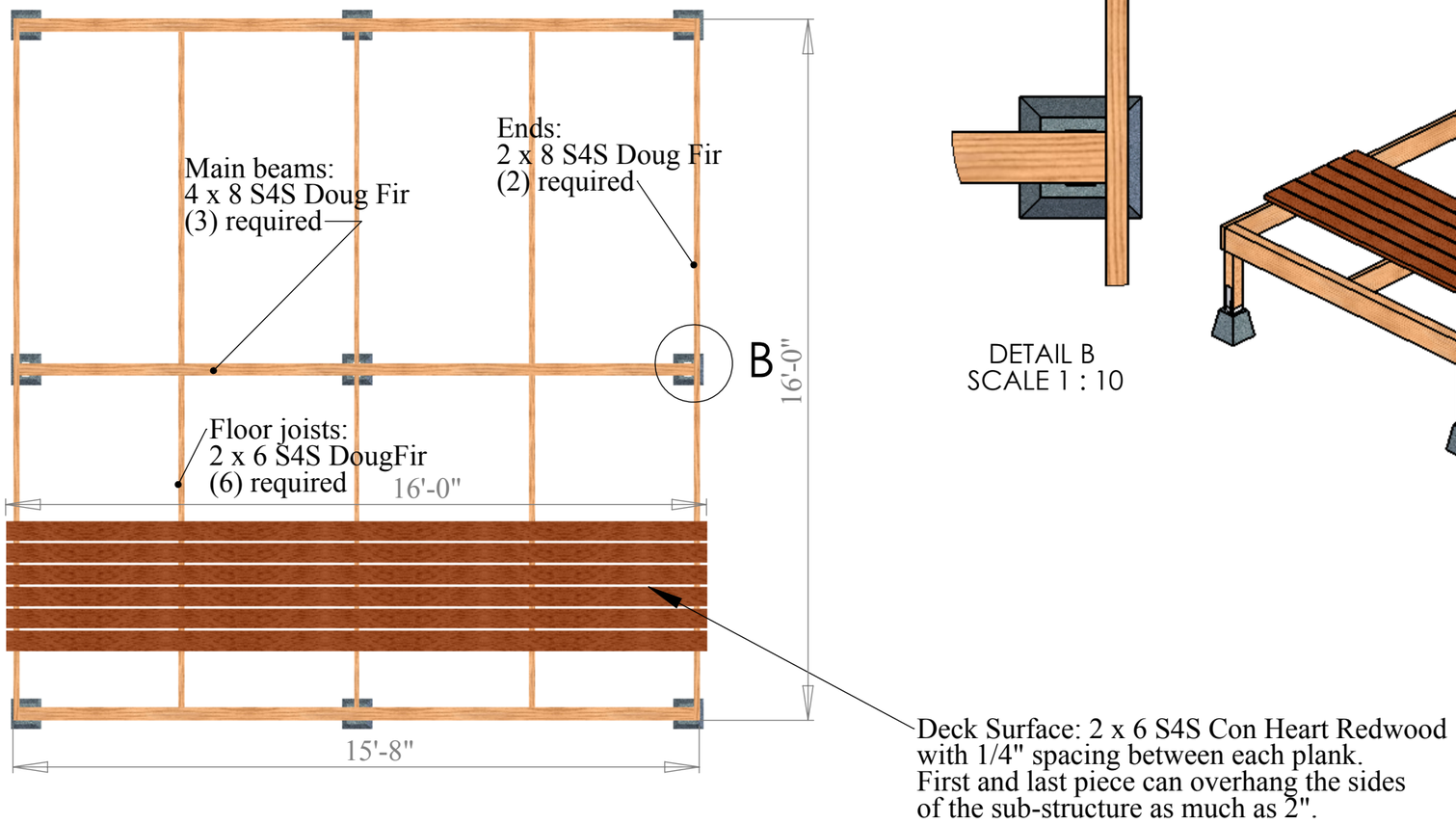

DETAIL B
SCALE 1 : 10

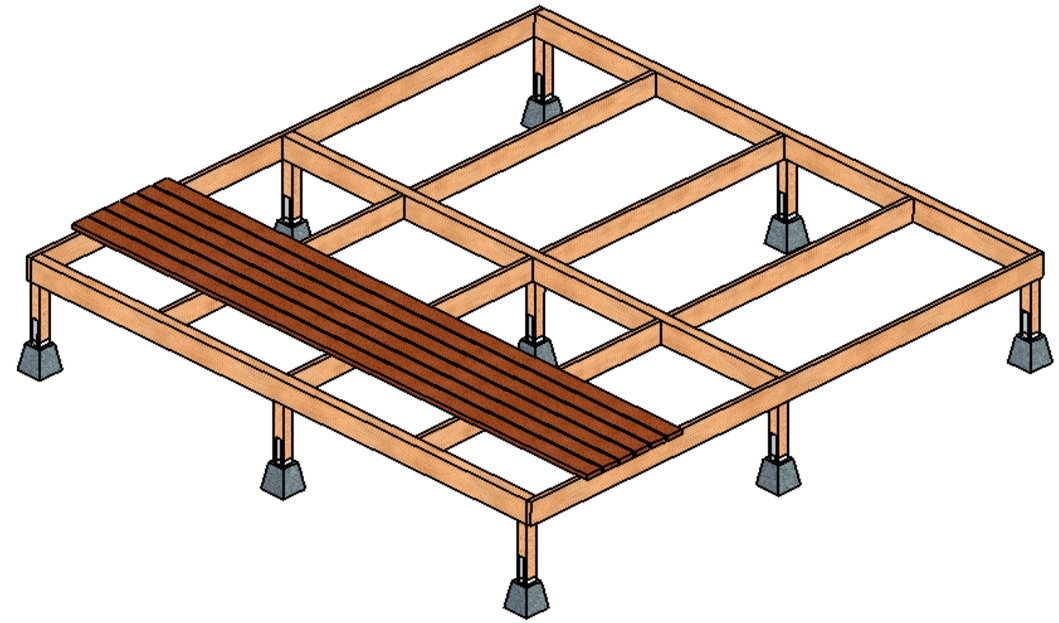

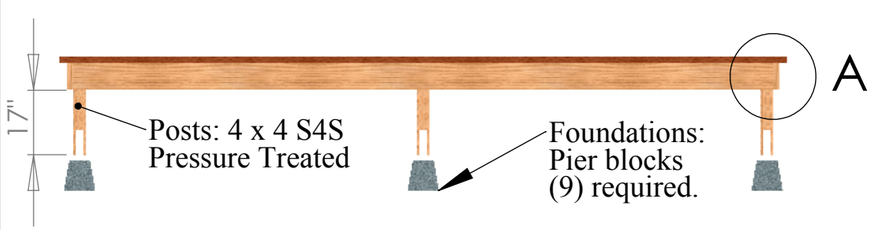

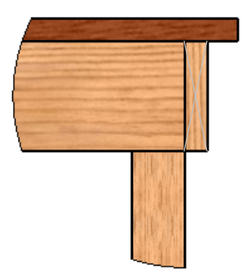

DETAIL A
SCALE 1 : 10

FFA State Finals 2019
Ag. Mechanics--Problem Solving

Utility Deck

Scale: 1/40